PG-60
PG-90
PG-120

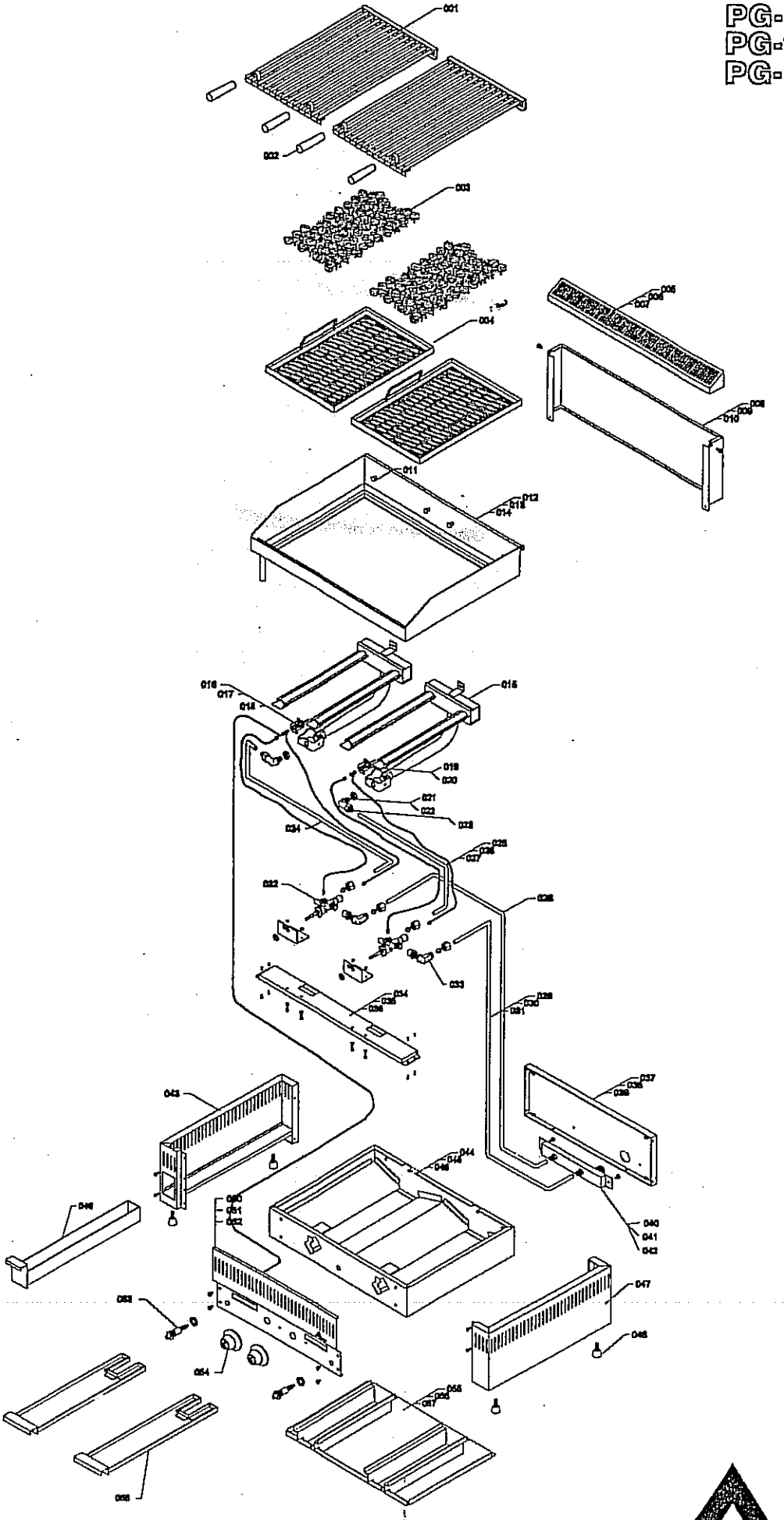

MAINHO